HOMEbox® EVOLUTION Q30

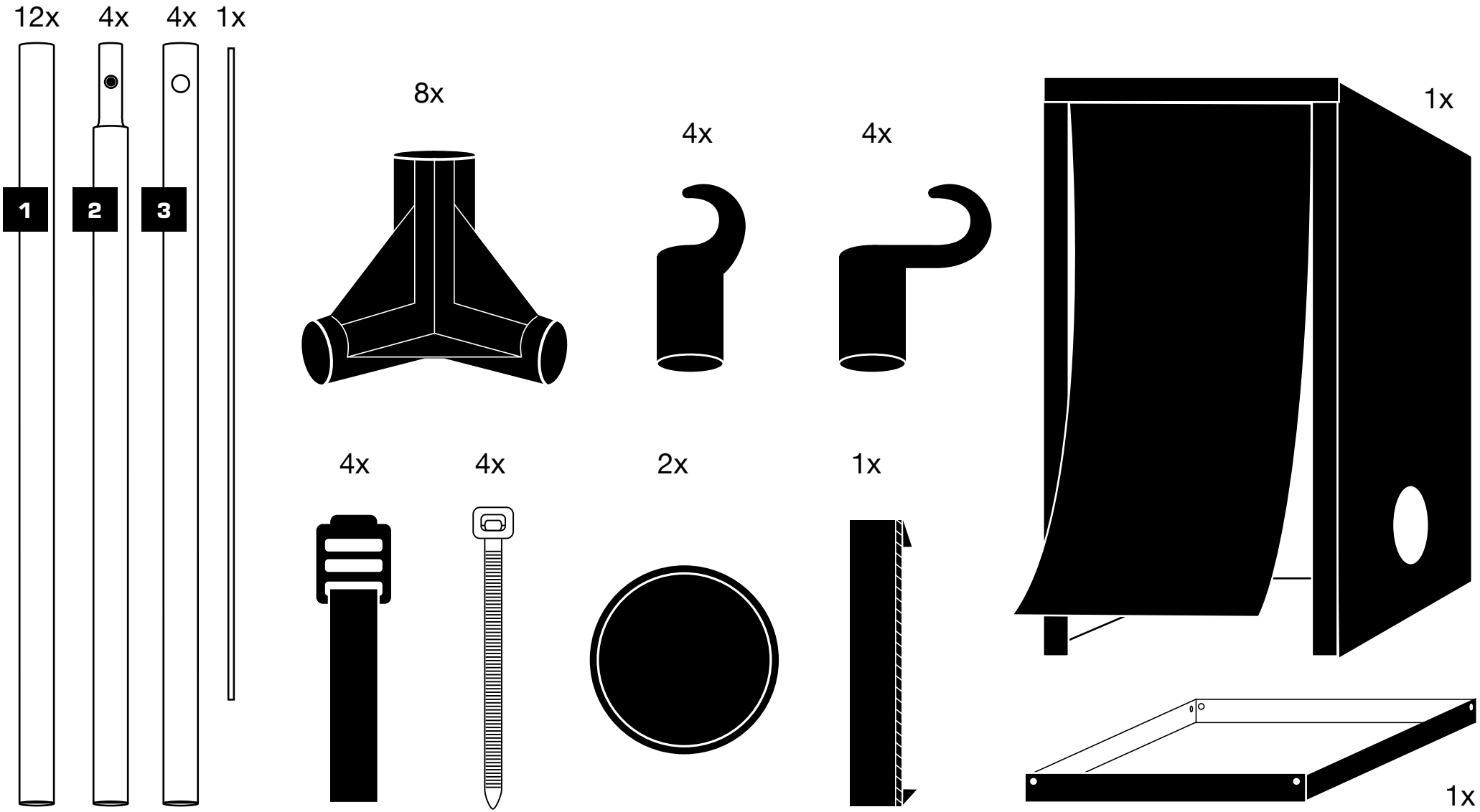

HOMEbox® EVOLUTION

1

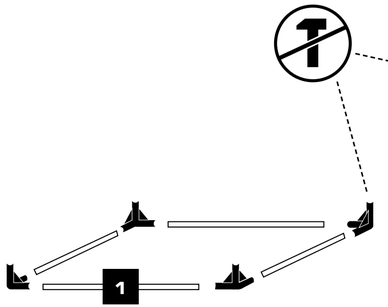

2

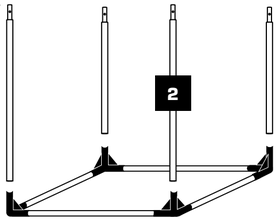

3

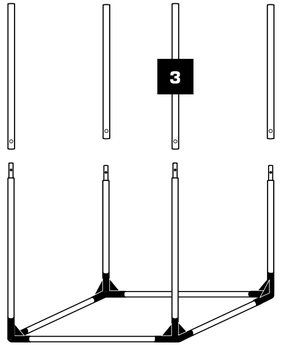

4

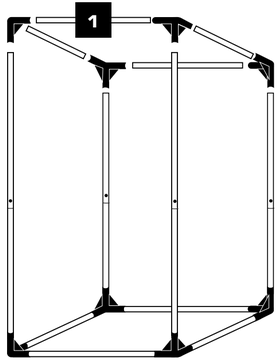

5

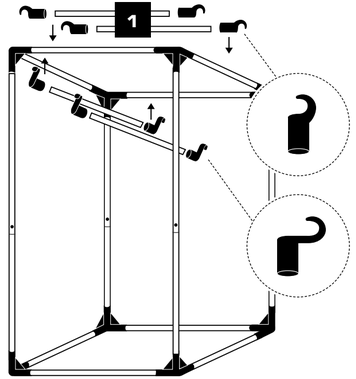

6

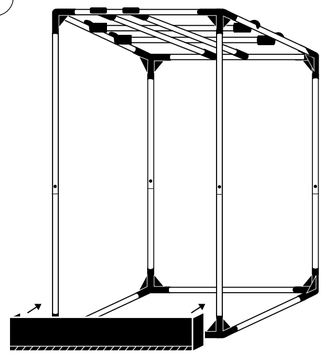

7

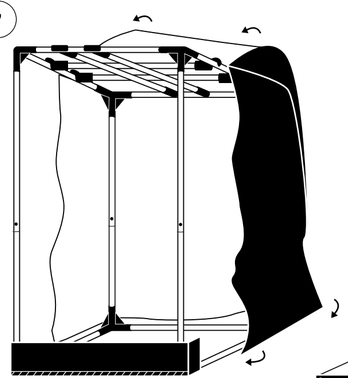

8

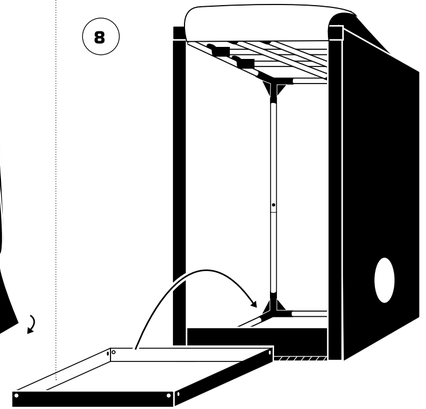

9

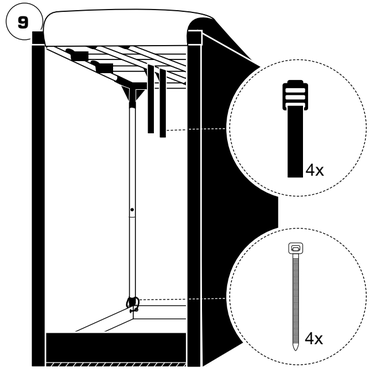

10

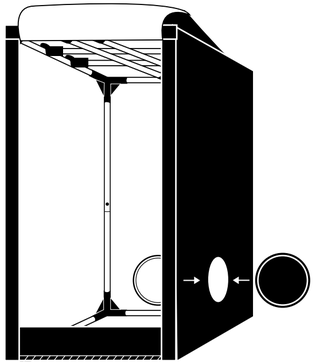
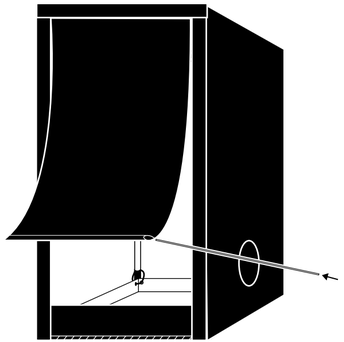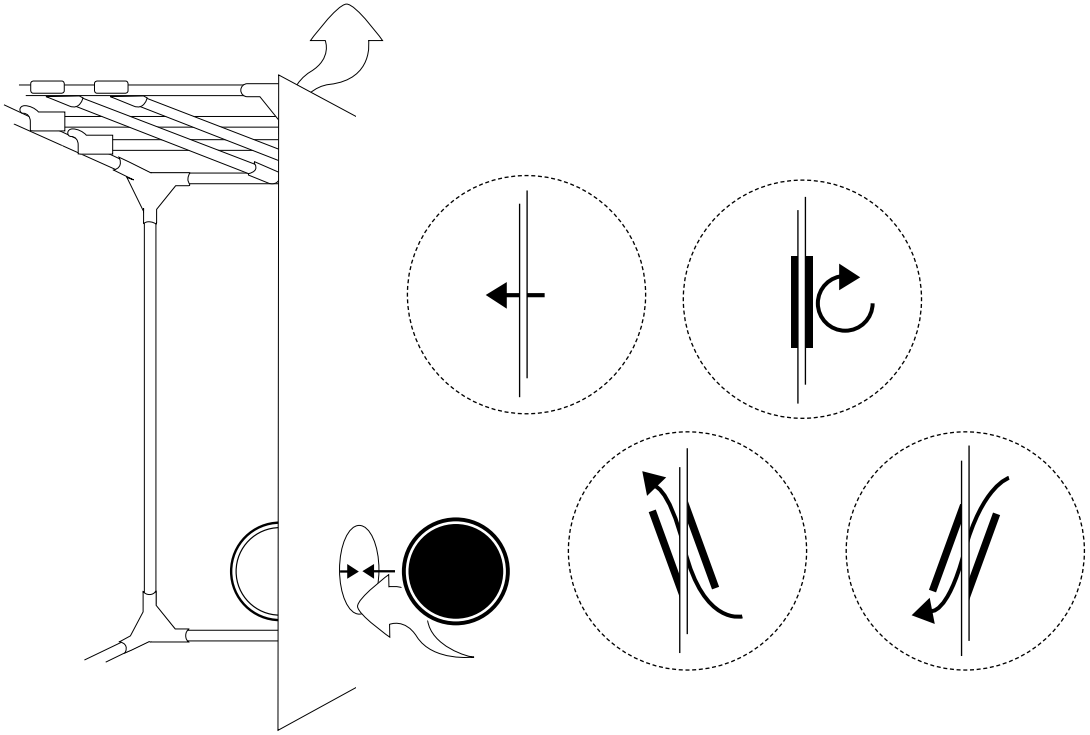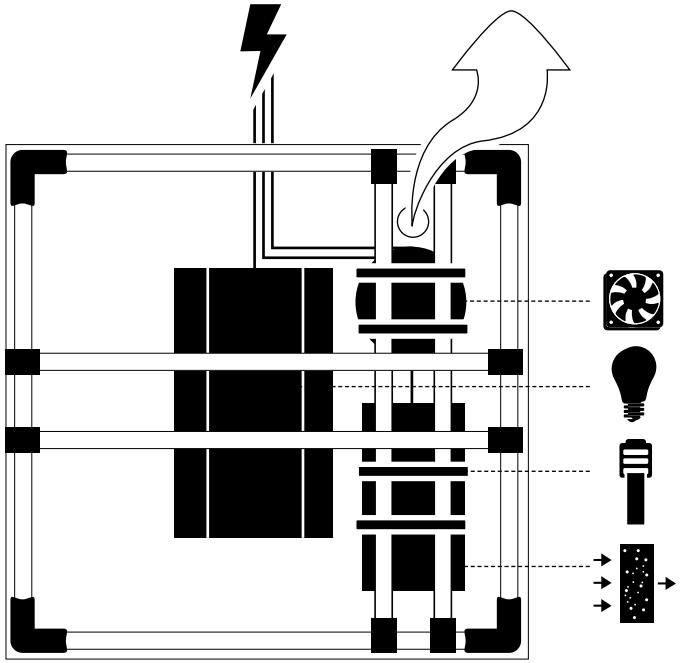
11